International Journal of Analog Integrated Circuits
Vol. 1: Issue 1
www.journalspub.com

Grid Interconnection of RES at the Distribution Level with Power-Quality Enhancement Features

Anand Kaurwar, Vijay Bhuria*
Department of Electrical Engineering, Madhav Institute of Technology and Science, Gwalior, Madhya Pradesh, India

Abstract

This paper depicts improved system of force quality at utility end in a system structure connected with renewable wellspring of vitality for power era. With progression of new functionalities daylight based essentialness based Photovoltaic cells are expected vitality source with higher productivity. With the expansion in load request, the Renewable Energy Sources (RES) are progressively associated in the dissemination frameworks which uses control electronic Converters/Inverters. The Photo Voltaic (PV) Panel is demonstrated in light of related conditions. The use of non-direct loads in the power framework will incite the period of current sounds which in this way separate the power quality. The Problems like current unbalance current music furthermore of infusing the vitality produced by renewable vitality source. The inverter is controlled on the premise of hysteresis control and hence it can be used as a power converter infusing power produced from RES to the lattice. At the point when the power produced from RES is more than the aggregate load control request, the lattice interfacing inverter with the proposed control approach not just satisfies the aggregate load dynamic and receptive power request additionally conveys the overabundance created sinusoidal dynamic energy to the framework at solidarity control figure. This work is finished using MATLAB/Simulink programming.

Keywords: active power filters, distributed generation, grid interconnection, grid interfacing inverter, photo voltaic cell

****Corresponding Author***
E-mail: anand.kaurwar@gmail.com

INTRODUCTION

This paper exhibited here shows one of a kind and compelling procedure for arranging a grid connected to renewable source of energy as solar energy and Harmonic Relief in framework utilizing Active Filter on utility side. Sun based power is saddled through PV boards and symphonious bending is sifted utilizing Shunt Active channel. Because of expanding air pollution, global warming concerns, diminishing fossil fuels and their expanding cost have made it important to look towards Renewable Energy Sources (RES) as a future vitality arrangement. In discovering answers for beat a worldwide energy emergency, the Photograph Voltaic (PV) framework has pulled in critical consideration as of late. The legislature is giving motivating forces to assist expanding the utilization of grid-connected PV frameworks. Renewable Vitality Sources are progressively incorporated at the dispersion level because of expansion in burden request which use power electronic converters. Because of the broad utilization of power electronic gadgets, aggravations happen on the electrical supply system. These unsettling influences are because of the utilization of non-

straight gadgets. These will present sounds in the force framework in this way bringing about gear overheating, harm gadgets, EMI related issues and so on. APF is broadly used to remunerate the present sounds and load unbalance. This will bring about extra equipment prerequisites. Along these lines, in this paper, the current PV inverter goes about as Shunt Active Power Filter (SAPF) that is able to do all the while remunerating issues like current unbalance, Current music furthermore of infusing the vitality created by RES. The shunt dynamic channel is a voltage source inverter (VSI), which is associated in parallel with load. Shunt Active Power Filter can keep the mains current adjusted and sinusoidal after pay for different Load condition (Figure 1). [1–5]

Disposal of current music, remuneration of responsive power, Correction of force component Photovoltaic cells changes over sun powered vitality to direct electric vitality. Different ethics of sunlight based vitality are:

(1) It requires less time to introduce and start up new unit for era.

(2) It has no pivoting parts, henceforth no commotion, no support and long existence with less upkeep.

(3) Solar vitality is liberally accessible on earth.

(4) Problem of low effectiveness and higher starting expense can be overcome by propel innovation sun powered PV board.

(5) This vitality source is non-contaminating and accessible constantly free of cost. The paper closes with a conclusion on future works.

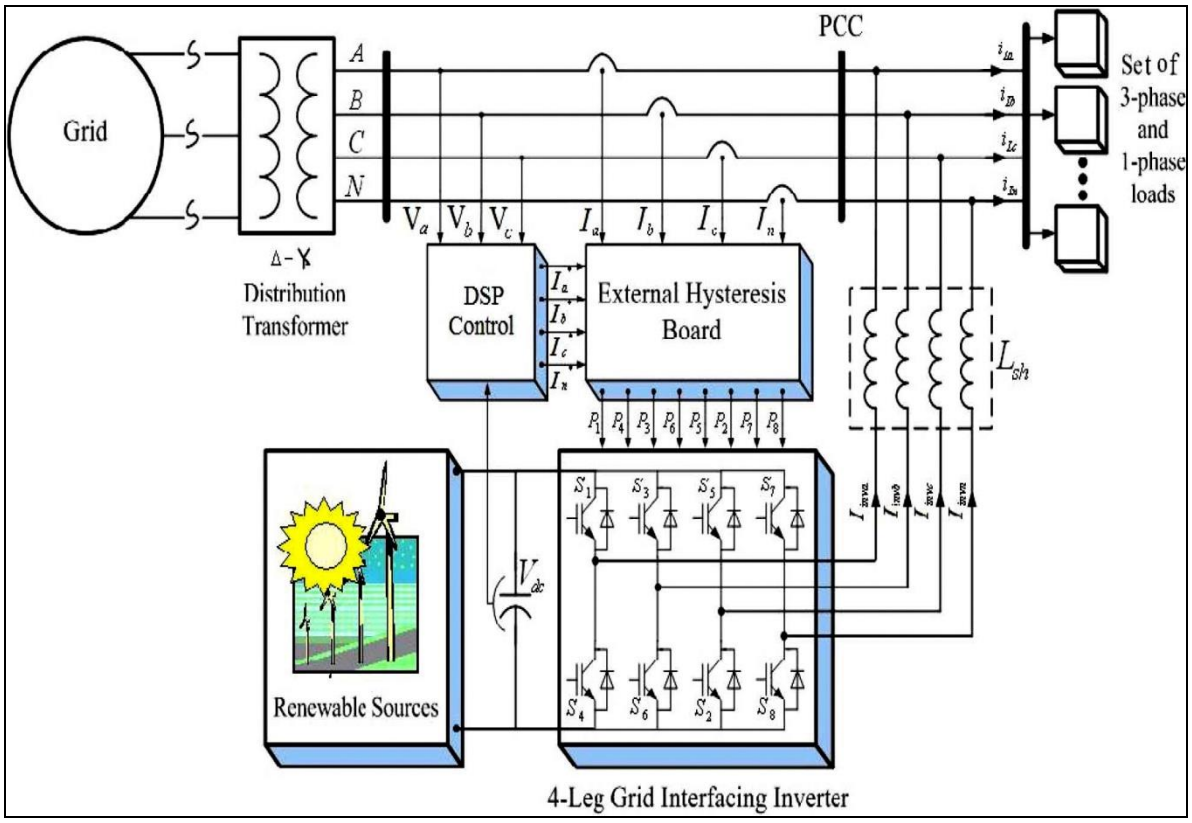

Fig. 1. *Proposed System.*

The proposed grid-interfacing inverter can effectively be used to perform taking after essential function:

(1) Transfer of active power gathered from the renewable assets (wind, sun powered, and so on.).

(2) Load reactive power request support.
(3) Current harmonic pay at PCC.
(4) Current unbalance. The proposed control approach not just satisfies the aggregate burden active and reactive power demand additionally conveys the overabundance produced sinusoidal active power to the grid at solidarity power element.

SYSTEM DESCRIPTION

Dynamic power channels are power electronic gadgets that counterbalance undesirable consonant streams by infusing a pay current which crosses out music in the line current. Shunt dynamic power channels repay stack current sounds by infusing break even with however inverse symphonious remunerating current. For the most part, four-wire APFs have been considered utilizing four leg converters. This topology has demonstrated preferable controllability over the established three-leg four-wire.

In this paper, it is demonstrated that utilizing a sufficient control methodology, even with a three stage four-wire framework, the topology of the explored APF and its interconnection with the lattice is introduced It involves a three leg four-wire voltage source inverter. In this sort of employments, the VSI acts as a current controlled voltage source. The proposed system is Three Phase Four wire which includes Photovoltaic structure connected with the dc-association of a framework interfacing inverter.

The voltage source inverter is a key part of a PV system. As it interfaces the renewable essentialness source to the matrix and passes on the created control.[6, 7]

PV PANELS

Sun oriented cell is fundamentally a photovoltaic cell type of p-n intersection. It when presented to daylight retains some vitality more noteworthy than band-hole. This makes some opening electron sets corresponding to episode radiations. These bearers are influenced by inward electric fields of p-n intersection and structures photograph current corresponding to sun oriented protection. PV cells have nonlinear attributes which change with radiation force and temperature.

PV cells creates under 3W at 0.5 to 0.6 Volts, so cells are associated in arrangement to deliver enough power. The terminal condition for the current and voltage of the variety of PV boards are given as

$$I_{pv} = I_p - I_D - I_{sh} = 0 \quad (1)$$

$$V_{PVcell} = V_D - R_S I_{PV} \quad (2)$$

$$I_{sh} = \frac{V_{pv} + R_S I_{pv}}{R_{sh}} \quad (3)$$

$$I_D = I_0 (e^{\frac{q(V_{pv} + R_S I_{pv})}{NkT}} - 1) \quad (4)$$

Ip is the light generated current, Vpv the terminal voltage of the cell, ID the diode current, Io the saturation current, Ish the Shunt current, Q the electron charge, k the Boltzmann constant, T the temperature, Rs the series resistance and Rsh is the Shunt resistance.

High-penetrated grid-connected PV systems, which are known as a type of DG in the megawatt range, are rapidly developed.

These cover most of the PV advertise in various nations around the world.

The main components of a grid-connected PV system includes a series/parallel mixture of PV arrays to directly convert sunlight to DC power and a power-conditioning unit that converts DC power to AC power; this unit also keeps the PVs operating at maximum efficiency.[8]

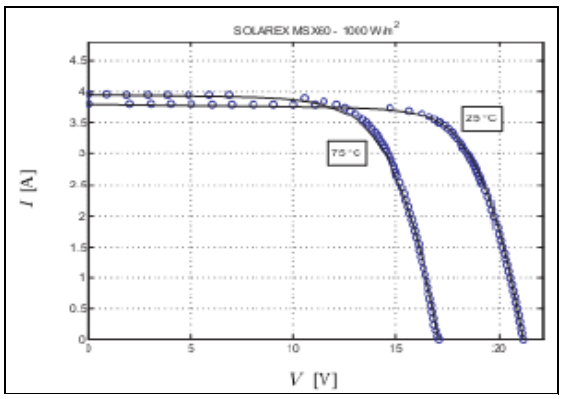

I-V model curves and experimental data of the MSX60 solar array at different temperatures, 1000 W/m².

The general graph of matrix associated PV frameworks. Strikingly, by and large, vitality stockpiling gadgets, for example, batteries and super-capacitors are likewise viewed as the third segment of matrix associated PV frameworks. These gadgets upgrade the execution of PV frameworks, for example, control era during the evening, responsive power control over the PV frameworks, top load moving, and voltage balancing out of networks.

SIMULATION OF THE PHOTOVOLTAIC ARRAY

The photovoltaic exhibit can be reenacted with a proportional circuit show in view of the photovoltaic model. Two reproduction techniques are conceivable. Circuit display utilizing one current source (Im) and two resistors (Rs and Rp). This circuit can be actualized with any circuit test system. The estimation of the model current I ascertained by the computational piece that has V, I, I0 and I pv as sources of info. I0 is gotten and Ivp is acquired. This computational square might be executed with any circuit test system ready to assess math capacities. Another circuit show made out of just a single current source. The estimation of the current is acquired by numerically settling the I–V condition. For each estimation of Va relating I that fulfills the I–V condition is acquired. The arrangement can be actualized with a numerical strategy in any circuit test system that acknowledges inserted programming. Different creators have proposed circuits for reproducing photograph voltaic exhibits that depend on rearranged conditions as well as require loads of computational exertion. In a circuit-based photovoltaic model is made out of a present source driven by a many-sided and wrong condition where the parallel resistance is ignored. In a complicated PSpice – based reproduction was displayed, where the I–V condition is numerically unraveled inside the PSpice programming. Al-however intriguing, the approach found in is unnecessarily explained and concerns the streamlined photovoltaic model without the arrangement resistance. In a straightforward circuit-based photovoltaic model is proposed where the parallel resistance is dismissed. In a circuit-construct model was proposed based with respect to the piecewise guess of the I–V bend. Albeit fascinating and generally basic, this strategy does not give an answer for discover the parameters of the I–V condition and the circuit show requires numerous segments. The photovoltaic model circuits executed with MATLAB/Simulink (utilizing the Sym Power Systems piece set) and PSIM utilizing the reproduction procedure. Both circuit models work splendidly and might be utilized as a part of the reenactment of force gadgets converters for photovoltaic frameworks. The I–V bends of the Solarex MSX60 sun powered board recreated with the MATLAB/Simulink. [9]

BOOST CONVERTER AND INVERTER

Help converter builds voltage level for inverter and control MPPT. Yield voltage of support converter is higher than information voltage. Input current is same as inductor current and subsequently it is not irregular as buck convertor and consequently input channel prerequisites are casual in support convertor.

In the event that sunlight based boards of high appraising are actualized then necessity of help converter can likewise be casual and exchanging misfortune in converter can be spared. PV Panels create DC Voltage and to interface boards to network DC control must be changed over to AC Power. We oblige inverter to change over DC to sinusoidal AC before interfacing with lattice. Yield voltage and recurrence ought to be same as that of network voltage and recurrence. Numerous inverter topologies are accessible. In proposed conspire PWM (beat width balanced) Voltage Source Inverter is chosen d–q hypothesis with stage. Yield of the Inverter is close to Sinusoidal. 6 switches are utilized and its exchanging is controlled by discrete PWM signals. Electrical outline for inverter is appeared in Figure 2.

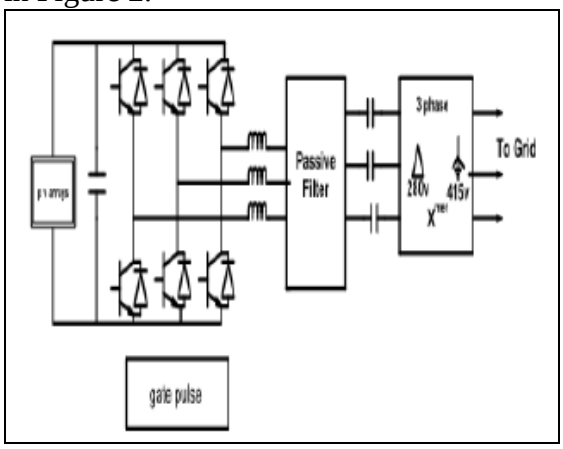

Fig. 2. *PWM 3 Phase Inverter With Passive Filter.*

Major Characteristics of PV Grid Connected Systems

Associated photovoltaic framework remains solitary and lattice associated are the two fundamental PV framework setups (Figure 3). This review concerns just the second design that is utilized to sustain power into the framework dissemination framework and additionally to power loads which can likewise be bolstered from the network.

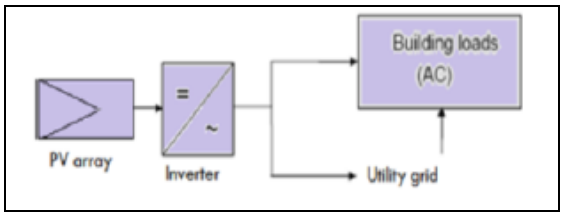

Fig. 3. *Schematic Diagram of PV Grid.*

Many reviews have described in profound detail PV matrix associated frameworks. This segment introduces a brief update about real parameters to be considered. Figure 2 demonstrates that the fundamental capacity to be guaranteed is the change from dc to air conditioning through an inverter. These inverters are associated straightforwardly to the matrix. For a wellbeing reason, the inverter ought to side road naturally if there should be an occurrence of force blackout. The coordination of PV frameworks to power systems is secured by the IEEE 1547.Power quality, power regulation and safety are main issues of these standards. Norms related to power quality present specifications related to the following parameters (Figure 4):

(1) Harmonics that produce distortions in the voltage and current waveforms.
(2) Power factor and dc injection that are mainly affected by inverters and converters structures and control methods.
(3) Voltage flicker that is due to transient interactions between the converters and the grid.

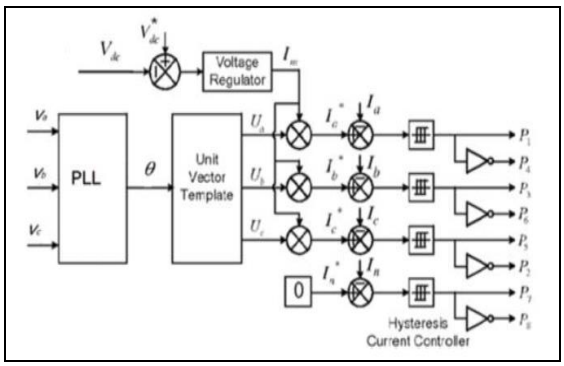

Fig. 4. *Control Scheme.*

Radio recurrence obstruction that is brought about by high exchanging frequencies of the converters. Establishing arrangements and island operation are the principle issues in wellbeing concerns. An islanding status happens when the framework doesn't give control any more. For this situation, the inverter ought to close down consequently. This operation ought to happen not later than a period indicated in the standards. In the event that establishing configuration doesn't take after required gauges, undesirable harming stage to ground voltages may happen before islanded status is come to. Direction of the voltage at the purpose of basic coupling PCC (point where the close planetary system is associated with the matrix) is a critical matter that is additionally considered in standards identified with disseminated assets. Voltage controllers are associated with the PCC so as to anticipate variety and unbalancing wonder. In the event that these controllers are not helpfully indicated, undesirable transient voltages might be created primarily when the PV framework is subjected to changes.

Sounds brings about voltage bending which is a noteworthy issue on utility side. Different issues identified with sounds, for example, line misfortune receptive influence, reverberation issue warming of types of gear prompts to decrease in dependability of framework. Dynamic channels give a reasonable answer for relieve issues experienced because of music on utility side. Symphonious reverberation is not an issue with this sort of channel. The dynamic channels are utilized for nonlinear load having time subordinate sounds. [10]

VOLTAGE SOURCE CONVERTER (VSC)

VSC is a power electronic gadget that associated in shunt or parallel to the framework. It can produce a sinusoidal voltage with any required extent, recurrence and stage edge. It likewise changes over the DC voltage crosswise over capacity gadgets into an arrangement of three stage AC yield voltages. It is likewise competent to produce or retains receptive. Along these lines, it will remunerate the responsive power through AC framework. The sort of force switch utilized is an IGBT as a part of hostile to parallel with a diode.

CONTROLLER FOR ACTIVE POWER FILTER

The dc interface voltage, Vdc is detected at a normal interim and is contrasted and its reference partner Vdc*.The mistake flag is prepared in a PI-controller. The yield of the pi controller is meant as Im. the reference. The present layouts (Ia*, Ib*, and Ic*) are gotten by increasing this pinnacle esteem (Im) by the three-unit sine vectors (Ua, Ub, and Uc) in stage with the three source voltages. These unit sine vectors are acquired from the three detected line to nonpartisan voltages. The reference matrix impartial current (In*) is set to zero, being the prompt aggregate of adjusted network streams. Duplication of greatness Im with stages (Ua, Ub and Uc) brings about the three stage reference supply streams (Ia*, Ib*, and Ic*).

The matrix synchronizing edge (Θ) got from stage bolted circle (PLL) is utilized to create solidarity vector layout as

$$U_a = \sin\theta \tag{5}$$

$$U_b = \sin\left(\theta - \frac{2\pi}{3}\right) \tag{6}$$

$$U_c = \sin\left(\theta + \frac{2\pi}{3}\right) \tag{7}$$

The immediate estimations of reference three stage framework streams are process as

$$I_a^* = I_m * U_a \tag{8}$$

$$I_b^* = I_m * U_b \tag{9}$$

$$I_c^* = I_m * U_c \tag{10}$$

The neutral current is considered as

$$I_n^* = 0 \quad (11)$$

The reference grid currents(Ia*, Ib*, Ic* and In*) are matched with actual grid currents(Ia, Ib, Ic and In) to calculate the current errors as

$$I_{aerr} = I_a^* - I_a \quad (12)$$

$$I_{berr} = I_b^* - I_b \quad (13)$$

$$I_{cerr} = I_c^* - I_c \quad (14)$$

$$I_{nerr} = I_n^* - I_n \quad (15)$$

These blunder signs are given to hysteresis current controller then creates the exchanging beats for six IGBTs of the network interfacing inverter.

HYSTERESIS CURRENT CONTROL

The hysteresis current control (HCC) is the easiest control method to implement; it was developed by Brod and Novotny in 1985. The shunt APF is executed with three stage current controlled VSI and is associated with the air conditioner mains for repaying the present music. The VSI entryway control signs are brought out from hysteresis band current controller. A hysteresis current controller is implemented with a closed loop control system and waveforms are shown in Figure 5. An error sign is utilized to control the switches in a voltage source inverter. This mistake is the distinction between the desired current and the current being injected by the inverter. In the event that the blunder surpasses the maximum furthest reaches of the hysteresis band, the upper switch of the inverter arm is killed and the lower switch is turned on. Subsequently, the present begins rotting the blunder crosses the lower furthest reaches of the hysteresis band, the lower switch of the inverter arm is killed and the upper switch is turned on. As a result, the current gets back into the hysteresis band. The minimum and maximum values of the error.

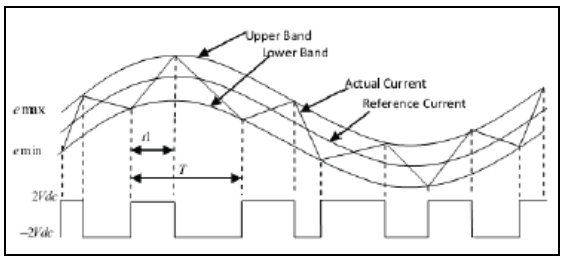

Fig. 5. *Waveform of Hysteresis Current Controller.*

SIMULATION RESULTS

The performance of the proposed structure is assessed by a computer simulation that uses MATLAB Software. The parameters of the proposed system are given in the tables below. The performance of the system with proposed control scheme is discussed, which includes the following case studies (Figure 6).

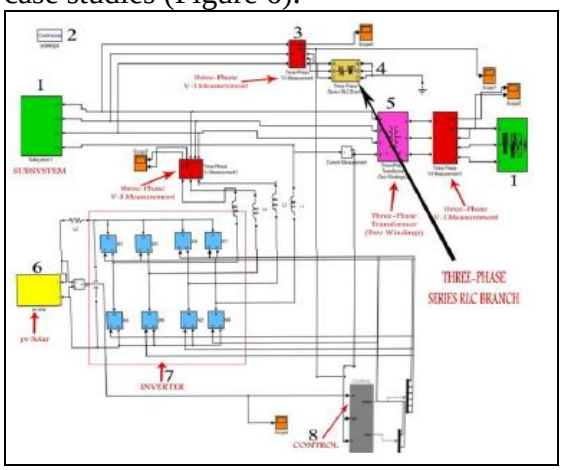

Fig. 6. *Grid Interconnect From PV Solar Energy Systems.*

In order to verify the proposed control approach to achieve multi objectives for grid interfaced DG systems connected to a 3-phase 4-wire network, an extensive simulation study is carried out using MATLAB/Simulink. A 4-leg current controlled voltage source inverter is effectively controlled to accomplish adjusted sinusoidal matrix streams at solidarity control calculate (UPF)

regardless of very unequal nonlinear load at PCC under differing renewable creating conditions. A RES with variable yield power is associated on the dc-connection of network interfacing inverter. An unequal 3-stage 4-wire nonlinear load, whose unbalance, music, and receptive power should be adjusted, is associated on PCC (Figures 7–12).

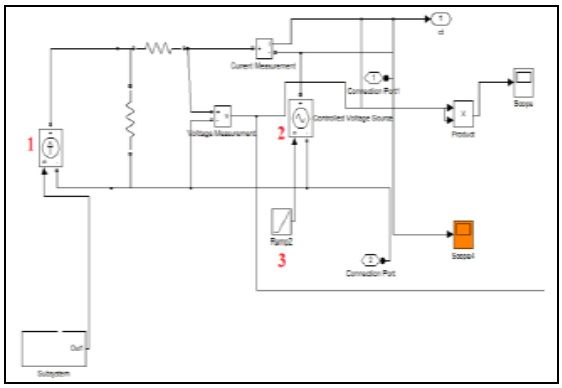

Fig. 7. *Simulink Model of the PV Solar System.*

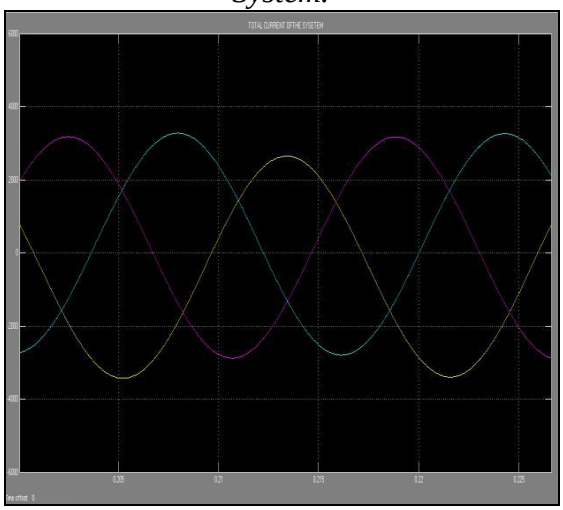

Fig. 8. *Total Current of Grid After Injected the PV Solar Energy Systems.*

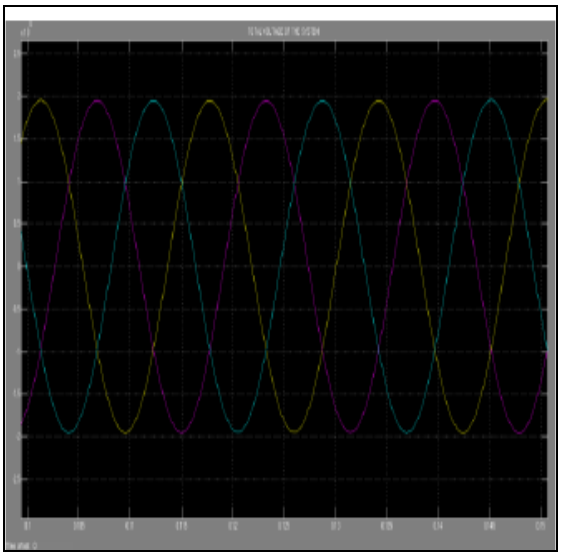

Fig. 9. *Total Voltage of Grid After Injected the PV Solar Energy Systems.*

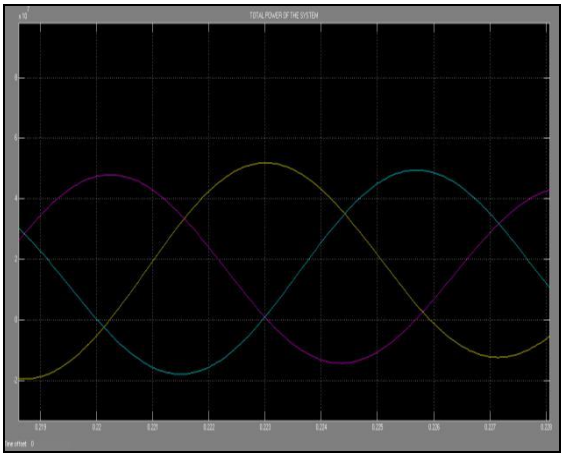

Fig. 10. *Total Power of Grid After Injected the PV Solar Energy Systems.*

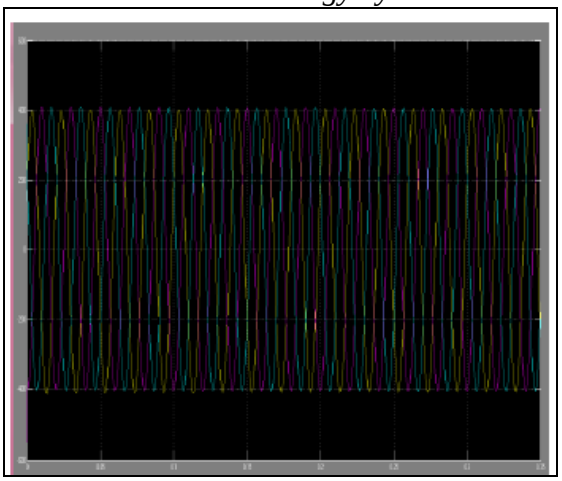

Fig. 11. *Load Voltage.*

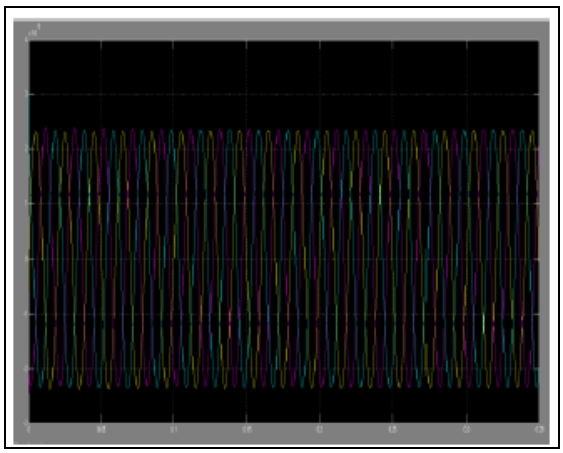

Fig. 12. *Load Current.*

CONCLUSION

PV sheets are related in arrangement and parallel to organize with network voltage. Parallel association grows current level. This DC power is changed over to AC utilizing inverter. Inverter is control to sustain dynamic energy to the lattice utilizing discrete PWM signals. There is consonant infusion in the framework because of nonlinear load on utility side. Synchronous reference plot for current control plan is realized for better outcomes.

At the point when the power produced from RES is more than the aggregate load control request, the matrix interfacing inverter with the proposed control approach not just satisfies the aggregate load dynamic and receptive power request additionally conveys the overabundance created sinusoidal dynamic energy to the framework at solidarity control variable and builds the effectiveness of the circuit.

REFERENCES

1. Singh M., Khadkikar V., Chandra A., *et al*. Grid interconnection of renewable energy sources at the distribution level with power-quality improvement features, *IEEE Trans Power Deliv*. 2011; 26(1).
2. Jaganmohan Reddy Y., Padma Raju K., Venkata Pavan Kumar Y. Use of DC motor-generator set for power quality improvement in a renewable energy based hybrid power system, *Int J Recent Trends Eng Technol*. 2011; 05(02).
3. Chen H.-C., Qiu J.-C., Liu C.-H. Dynamic modeling and simulation of renewable energy based hybrid power systems, *DRPT*. 2008; 2803–9p.
4. Brod D.M., Novotny D.W. Current control of VSI PWM inverters, *IEEE Trans Ind Appl*. 1985; IA-21(4): 562–70p.
5. Takeda M., *et al*. Harmonic current compensation with active filter, In: *IEEE IIAS Ann. Meeting*. 1987, 808p.
6. Karuppanan P., Mahapatrab K. PLL Synchronization with PID controller based on shunt active power line FILTER, *Int J Comput Electr Eng*. 2011; 3(1).
7. Raj A.B., Shyam B., Anto R. Simulation of distributed generation power inverter as active power filter using MATLAB/Simulink, *Int J Recent Trends Eng Technol*. 2011; 6(2).
8. Dugan R.C., McGranaghan M.F., Santoso S., *et al*. *Electrical Power Systems Quality*. 2nd En., McGraw-Hill.
9. Aiello M., Catalioti A., Favuzza S., *et al*. Theoretical and Experimental Comparison of Total Harmonic Distortion Factors for the evaluation of Harmonic and Inter harmonic Pollution of Grid-Connected, *IEEE Trans Power Deliv*. 2006; 21(3).
10. Myrzik J.M.A., Calais M. String and module integrated inverters for single-phase grid connected photovoltaic systems – A Review, *Power Technical Conference Proceedings*. 2003, IEEE Bologna.